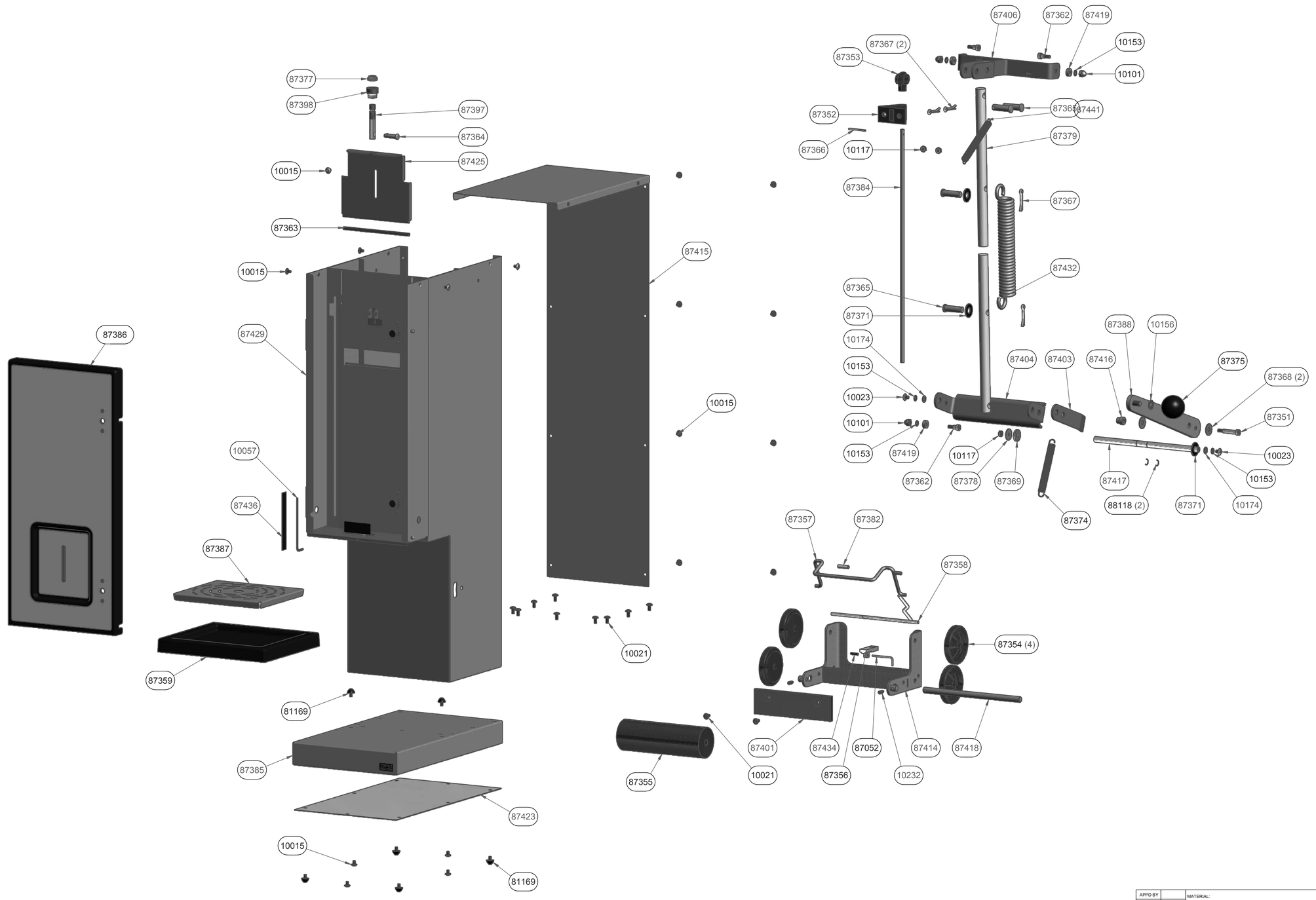

APPD BY		MATERIAL:	
CKD BY		TOLERANCES UNLESS OTHERWISE SPECIFIED FRAC ±1/64 DEC .00=±.01 .000=±.005 ANG ±1°	ECN 4206180
DRAWN BY DCK		**Server Products, Inc** RICHFIELD, WI 53076 USA 800-558-8722	
DATE 04/02/08			
SCALE 3/8=1		PART NAME SIMPLE SERV SIMS	SIZE D / DWG NO. 87350